POPULAR MECHANICS
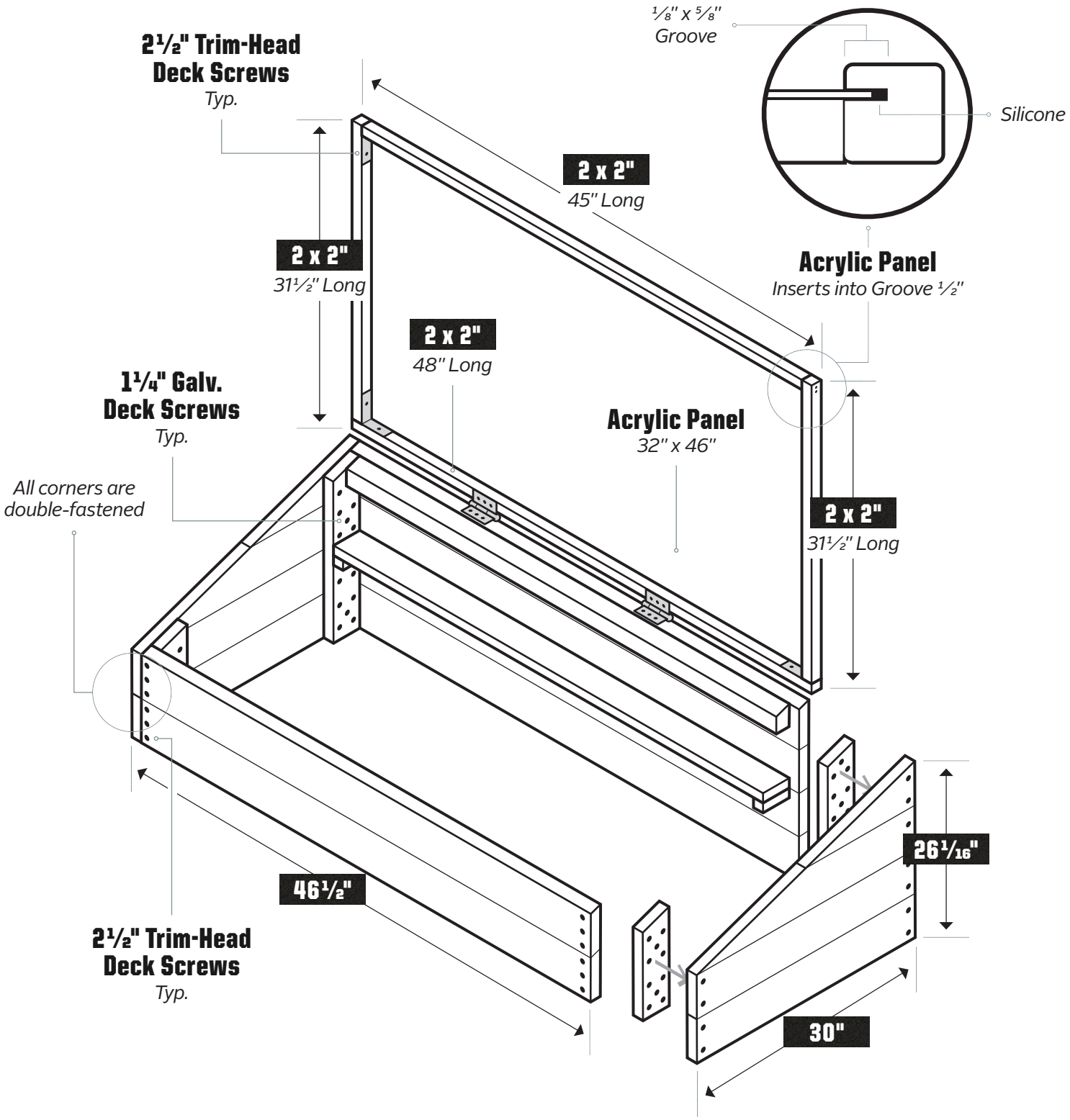
Cold Frame // YOUR BUILDING PLANS