POPULAR MECHANICS

Log Benches // YOUR BUILDING PLANS

POP PROJECTS

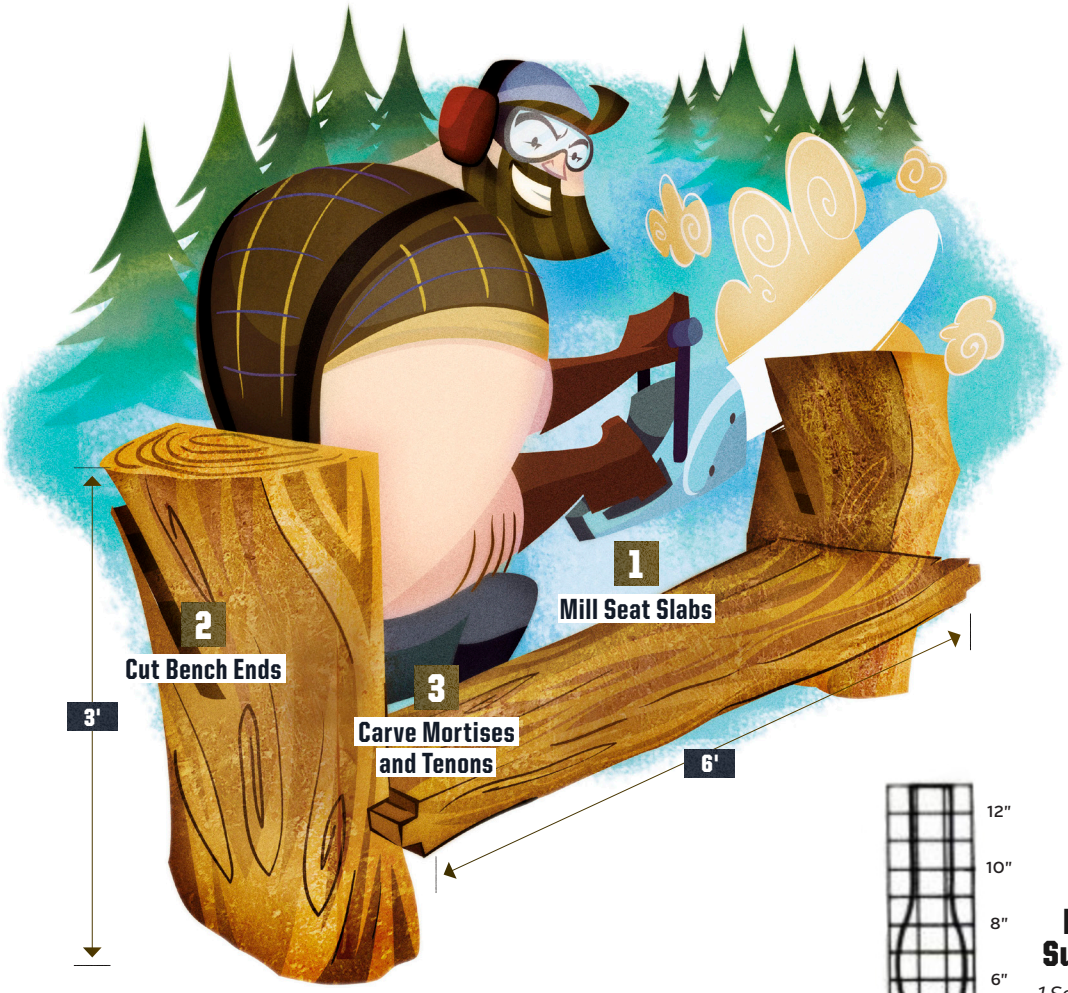

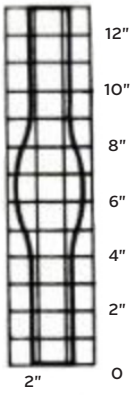

Back Support

1 Square = 1"

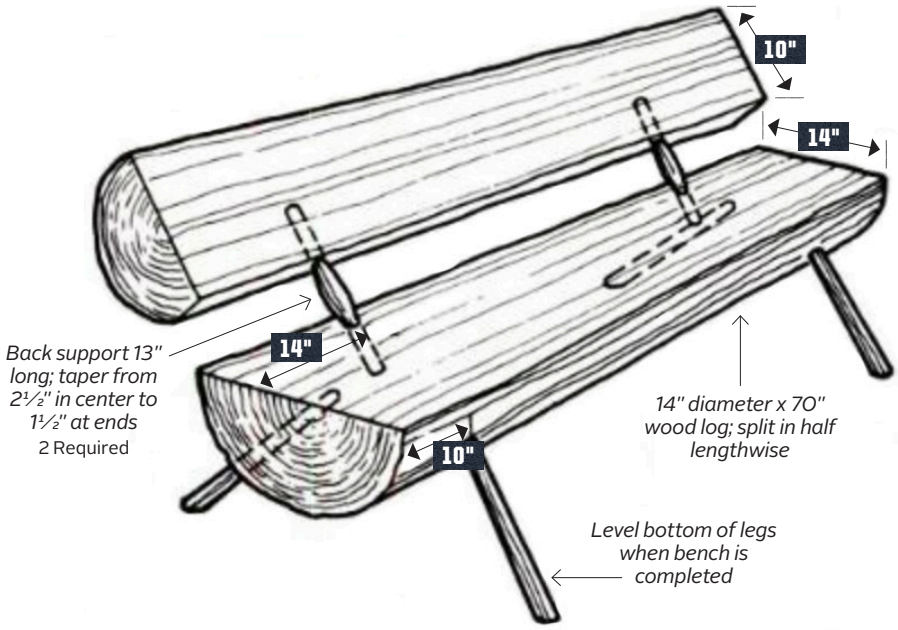

Back support 13" long; taper from 2½" in center to 1½" at ends
2 Required

14" diameter x 70" wood log; split in half lengthwise

Level bottom of legs when bench is completed

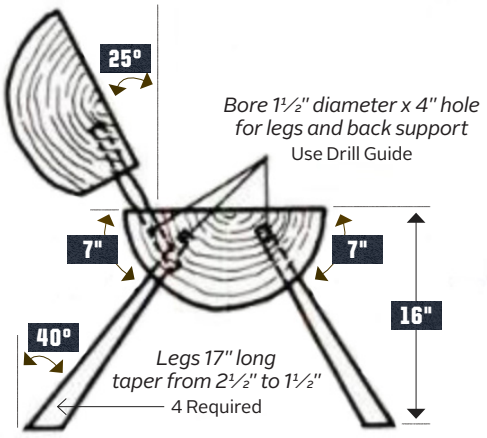

Bore 1½" diameter x 4" hole for legs and back support
Use Drill Guide

Legs 17" long taper from 2½" to 1½"
4 Required